SPARE PART LIST

RIPACK 2200

www.ripack.in

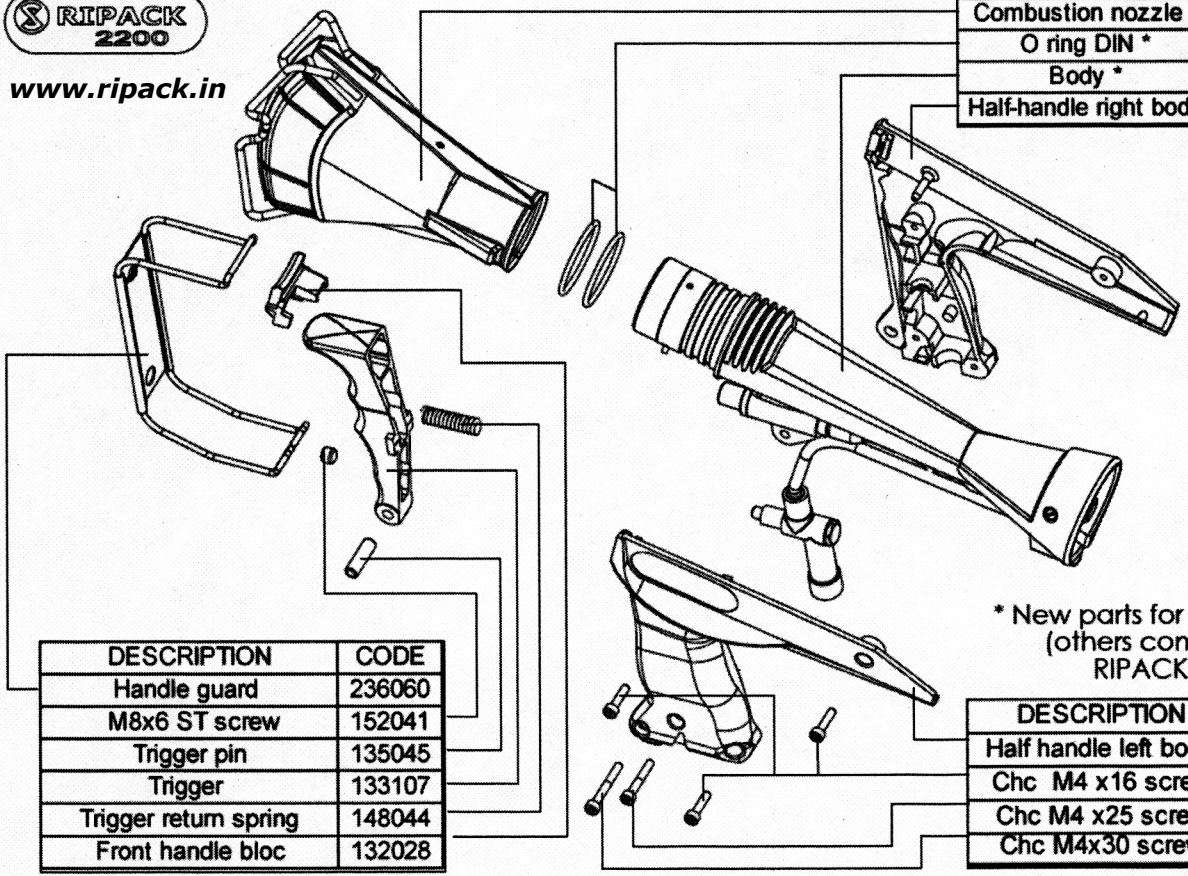

DESCRIPTION	CODE
Combustion nozzle *	248110
O ring DIN *	140060
Body *	233272
Half-handle right body	133105

DESCRIPTION	CODE
Handle guard	236060
M8x6 ST screw	152041
Trigger pin	135045
Trigger	133107
Trigger return spring	148044
Front handle bloc	132028

* New parts for RIPACK 2200 (others common with RIPACK 2000)

DESCRIPTION	CODE
Half handle left body	133106
Chc M4 x16 screw	152052
Chc M4 x25 screw	152065
Chc M4x30 screw	152066

FC LBM/Ref Rev. A 13-4-2006

SPARE PART LIST

RIPACK 2200

www.ripack.in

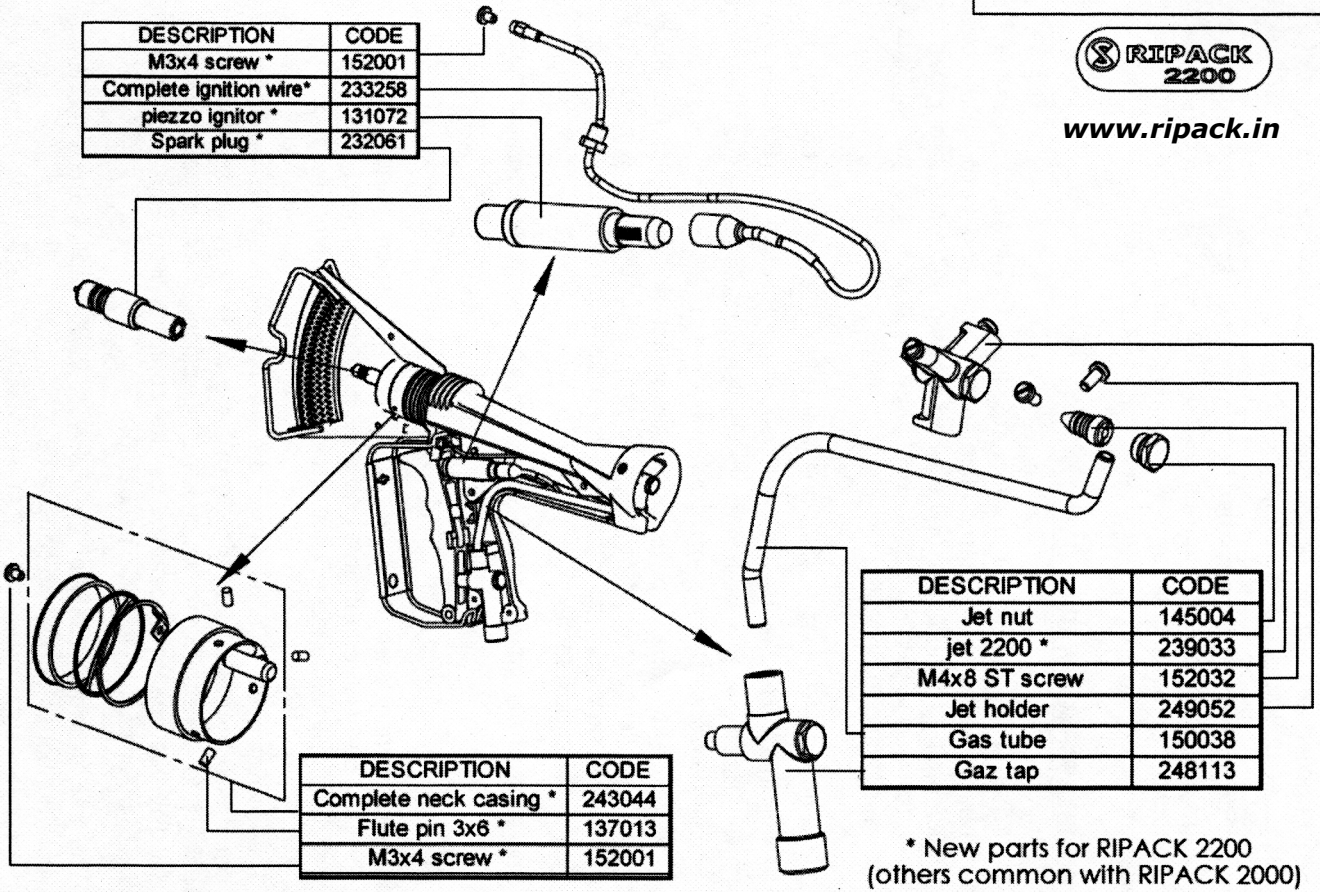

DESCRIPTION	CODE
M3x4 screw *	152001
Complete ignition wire*	233258
piezzo ignitor *	131072
Spark plug *	232061

DESCRIPTION	CODE
Jet nut	145004
jet 2200 *	239033
M4x8 ST screw	152032
Jet holder	249052
Gas tube	150038
Gaz tap	248113

DESCRIPTION	CODE
Complete neck casing *	243044
Flute pin 3x6 *	137013
M3x4 screw *	152001

* New parts for RIPACK 2200
(others common with RIPACK 2000)